TIME MODULE

25062024

TECHNICAL GUIDE
&
PARTS CATALOGUE

Cal.VC0 Series
(VC00G/01G)

ANALOGUE QUARTZ

SPECIFICATION

Item \ Cal. No.		VC00G	VC01G
Movement		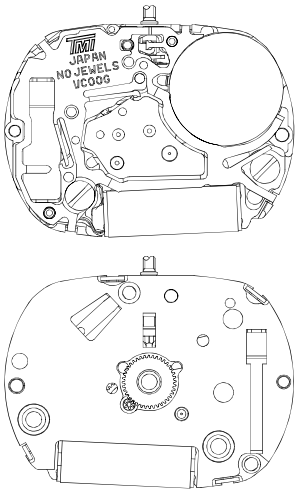	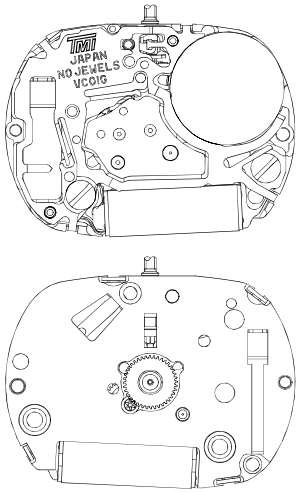
Movement size	Outside diameter	10.8 mm : between 3 o'clock and 9 o'clock sides 14.5 mm : between 6 o'clock and 12 o'clock sides	
	Casing diameter	13.9 mm : between 6 o'clock and 12 o'clock sides	
	Total height	2.38 mm (including the battery)	
Time indication		2 Hands	3 Hands
Driving system		Step motor (Load compensated driving pulse system type)	
Additional function		Electronic circuit reset switch	Electronic circuit reset switch Second setting device
Loss/Gain (Monthly rate) Frequency of crystal oscillator		Less than ± 20 seconds at normal temperature range 32,768 Hz	
Operational temperature range		- 5 ℃ ~ + 50 ℃	
Regulation system		Nil	
Measuring gate by quartz tester		Use 10 second gate	
Battery		SR521SW (Silver oxide battery) Battery life is approximately 3 years Voltage : 1.55 V	
Jewels		0 Jewel	

Disassembling procedures Figs. ① → ㉔ Reassembling procedures Figs. ㉔ → ①	Lubricating : Types of oil A3a / Moebius 9010 A2a / Moebius 9030 Oil quantity Normal quantity

[Cal.VC01G]

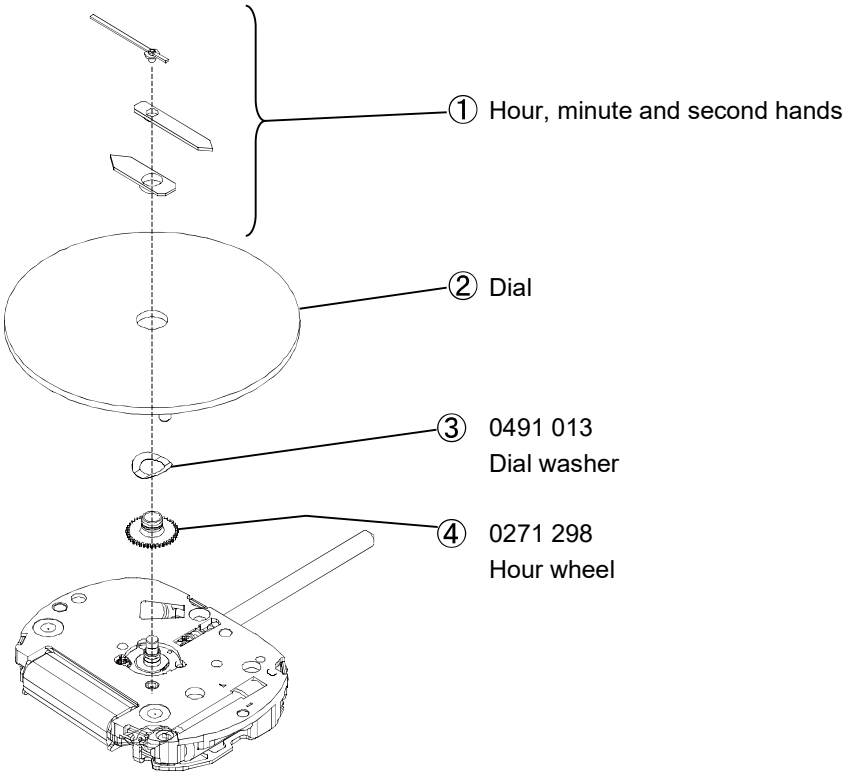

[Cal.VC00G]

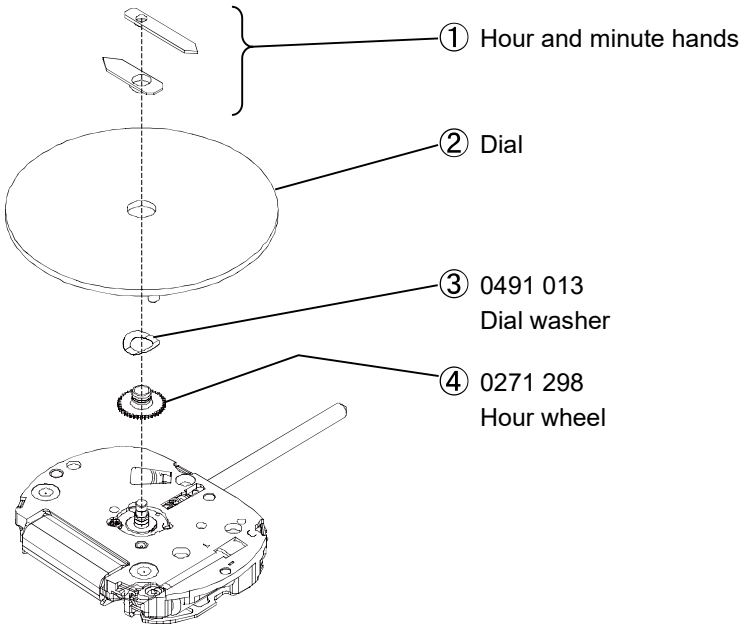

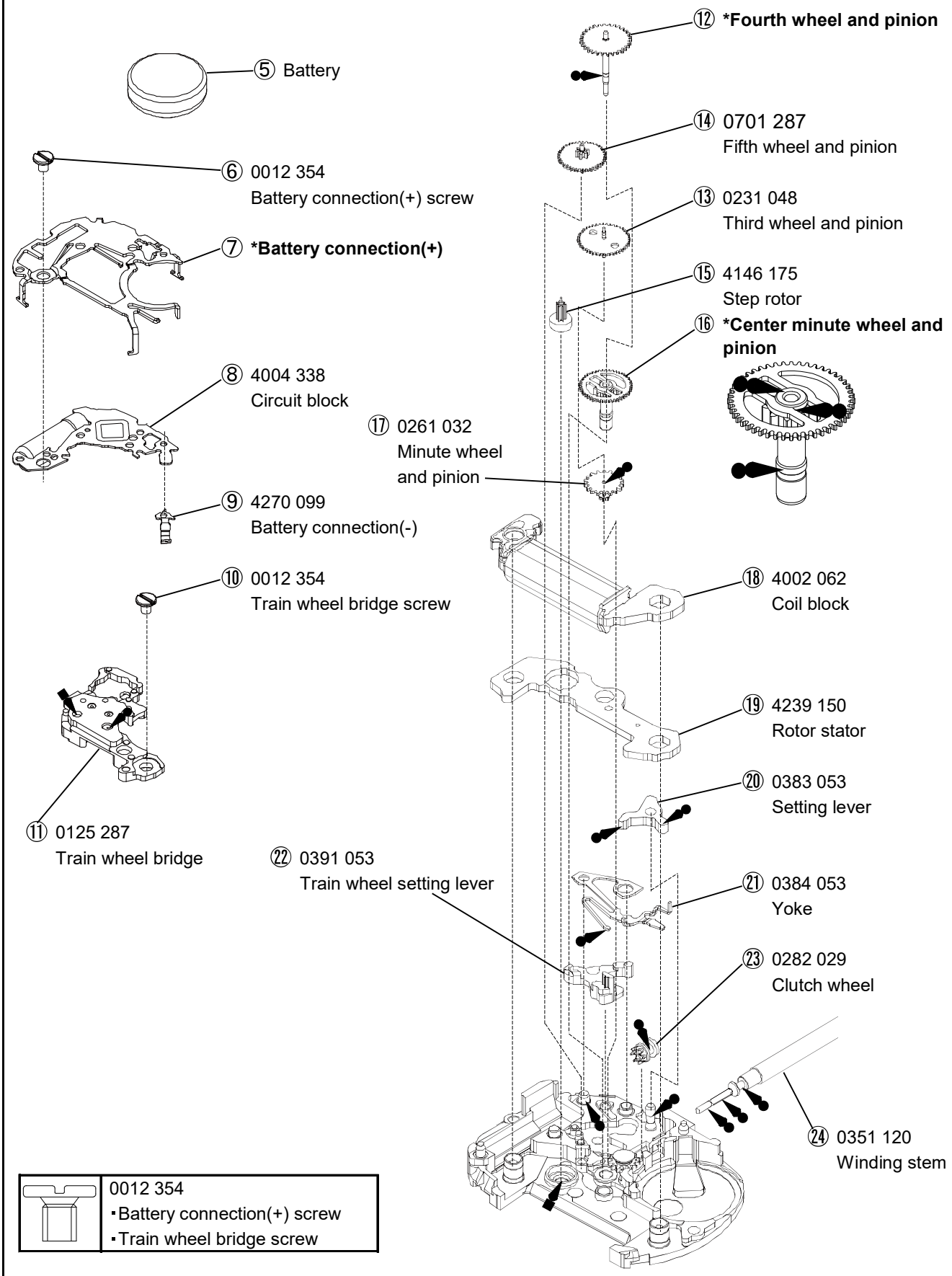

	0012 354 ・Battery connection(+) screw ・Train wheel bridge screw

***Refer to page 4 for each parts code**

Remarks :

O The part which is not common in Cal.VC00G/VC01G

Parts name		VC00G	VC01G
⑦	Battery connection(+)	4268 106	4268 104
⑫	Fourth wheel and pinion	0241 329	0241 133
⑯	Center minute wheel and pinion	0270 082	0270 298

*** All parts code are subject to change without notice.**

・The explanation here is only for the particular points of Cal.VC00G/VC01G

1. STRUCTURE OF THE CIRCUIT BLOCK

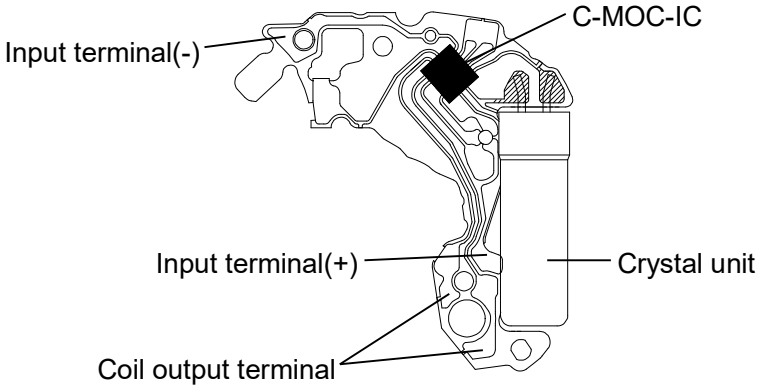

2. REMARKS ON DISASSEMBLING AND REASSEMBLING

(1) Hands

・How to install

Notes:

・When installing the hands, place the movement directly on a flat metal plate or the like, escaping the spring portion of the battery connection(+).

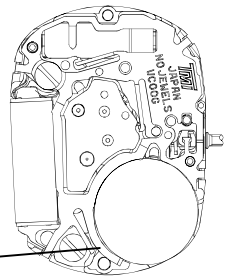

(2) Battery

・How to install

Notes:

・When installing the battery, check that the battery connection(+) securely touches the side face of the battery.

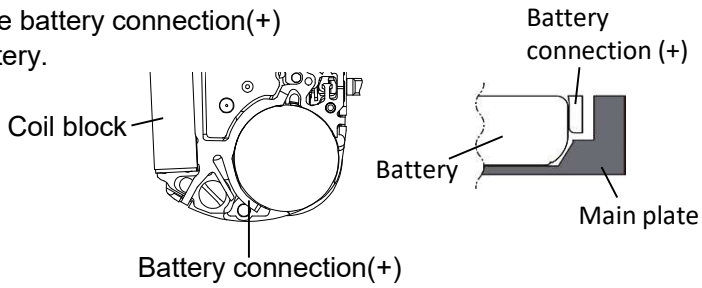

(3) Battery connection(+)

・How to install

Notes:

・Have the hook portions (4 places) catch the main plate.

・In disassembling and reassembling, take care not to deform the hook portions.

・After installing the battery connection(+), check that the four hook portions securely catch the main plate.

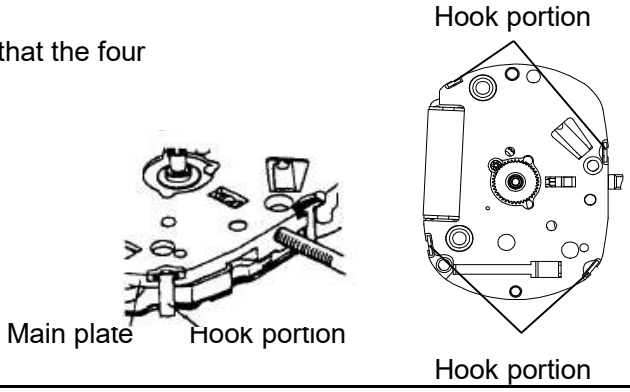

(4) Train wheel bridge
・Setting position
Notes:
・Since the fifth wheel and pinion and step rotor are made of plastics, take care not to damage them in disassembling and reassembling.

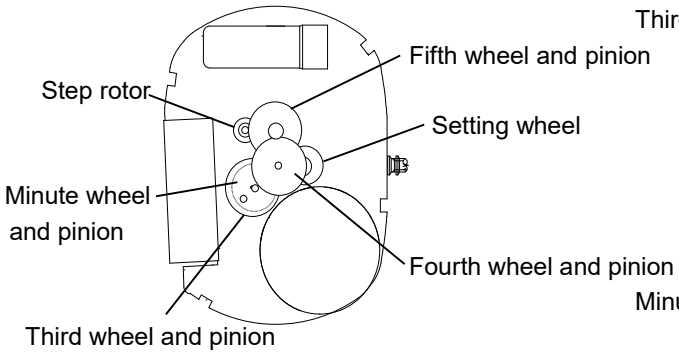

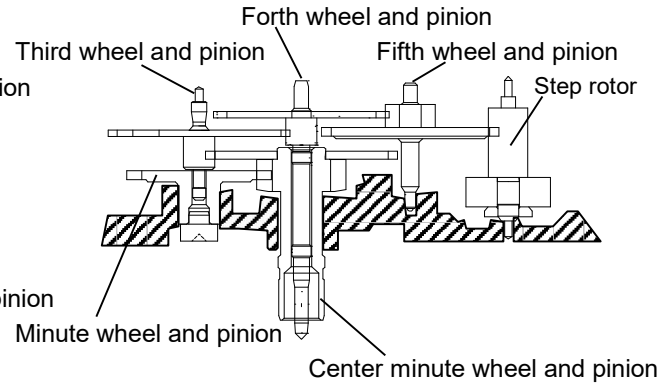

(5) Setting lever
(6) Yoke
(7) Train wheel setting lever
・Setting position
Notes:
・Take care not to deform the spring portion of the Yoke.
・Since the train wheel setting lever is made of plastics and easily damaged, Lightly catch it with tweezers taking care not to touch the portion engaging with the fifth wheel and pinion.

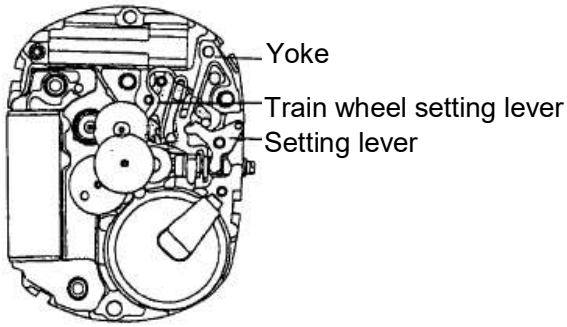
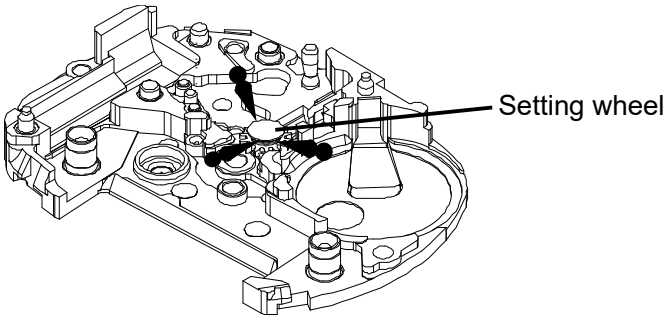
(8) Main plate
・Lubricating
Notes:
・Since the setting wheel is fixed securely to the main plate with a pin, never disassemble them apart.
・Apply a liberal quantity of Moebius A to the setting wheel.