TIME MODULE

Watch Movement Specification and Drawing

Slim / Small Movement

VC00G

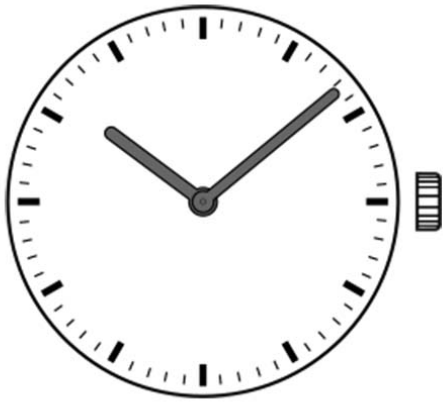

Movement Size: **4 ¾‴**

Diameter: **14.50mm[12H-6H] 10.80mm[3H-9H]**

Height: **2.38mm**

Items	Ver.	Items	Ver.
Specification	1		
Appearance	1		
Casing	1		
Hand Fitting	1		
Hand Setting Stem	1		
Dial	1		
Casing Ring - 1	1		
Casing Ring - 2	1		
Assembly Plan	1		
Hands	1		

Revised on : 09022022

Specification

VC00G

CAL.VC00G 4¾ Ligne Quartz Movement

Two Hands

1. FUNCTION

· Jewel	0 jewel	
· Accuracy	Less than ±20 seconds / month (Normal temperature range)	
· Battery life	Approx. 3 years	
· Regulation hands unbalance	Hour hand	: Less than 0.60 μN·m (60 mg·mm)
	Minute hand	: Less than 0.40 μN·m (40 mg·mm)

2. USE AND TEST CONDITION

· Battery	SR521SW	(Recommended battery is SEIZAIKEN)
· Operation temperature range	From - 5 ℃ to + 50 ℃	
· Antimagnetic	≧1600 A / m	(Direct current magnetic field)
· Test of accuracy	10 seconds	(Duration of measurement)

*** All specifications are subject to change without notice.**

Version : 1

Appearance

VC00G

	*
TYPE M	2
TYPE L	3

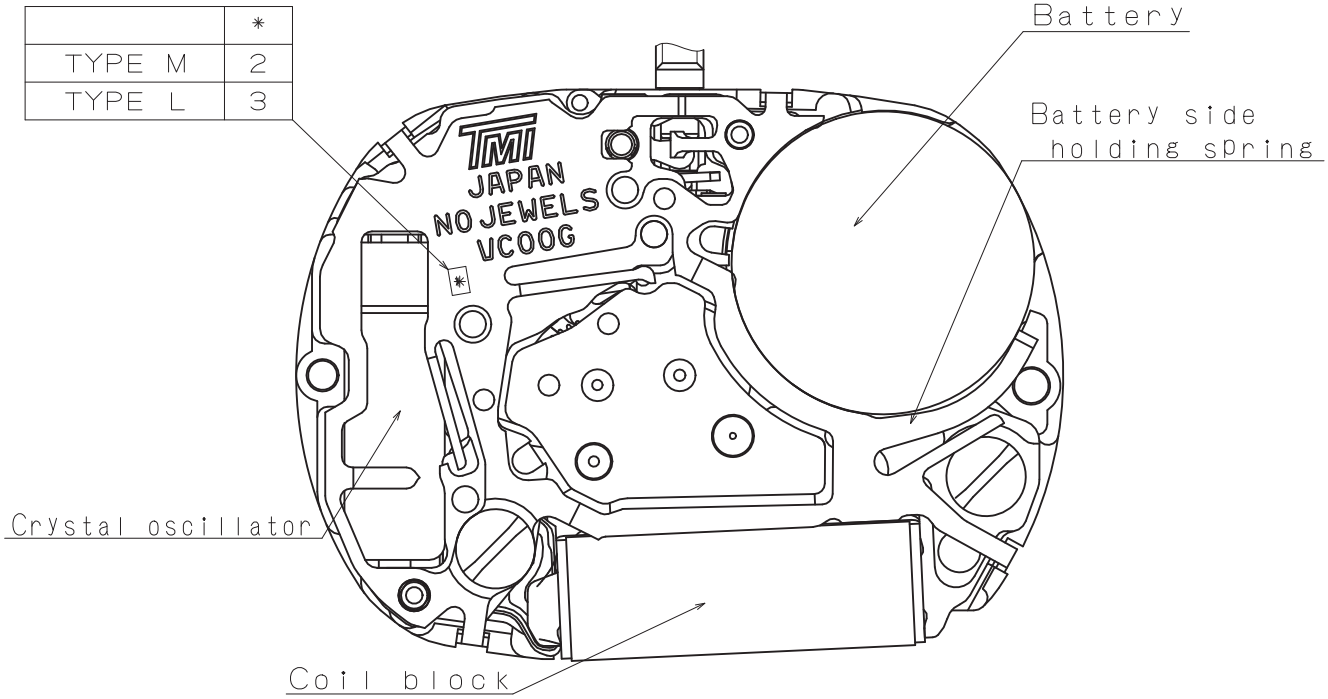

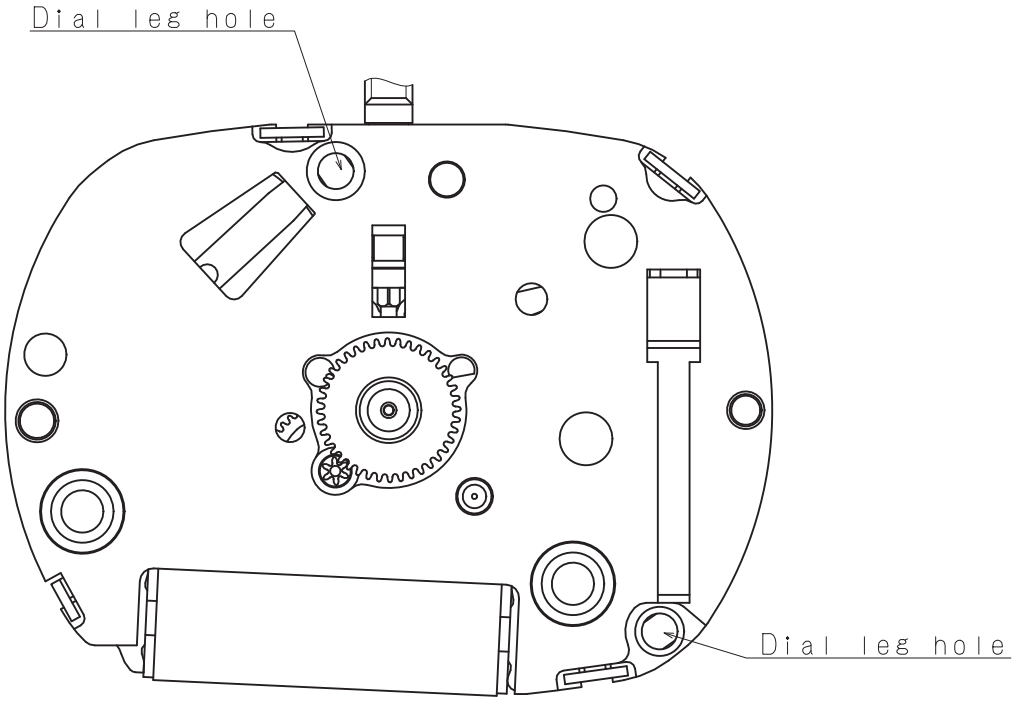

Version : 1

Casing

VC00G

Battery Side holding spring Type. * Pull out stroke 40

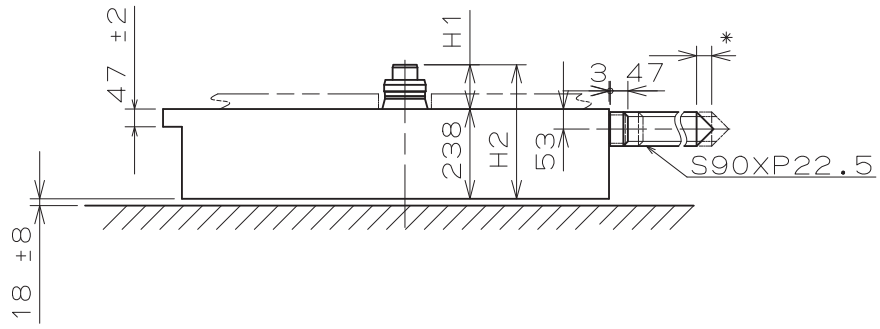

Center post 中心柱位		TYPE M 一般針高	TYPE L 高針
Maximum height from main plate surface 與機芯平面的最大高度	H1	117	150
Total height incl. movement 機芯總高度	H2	355	388

Hand Setting Stem	TYPE A	TYPE B
L1	1648	2140

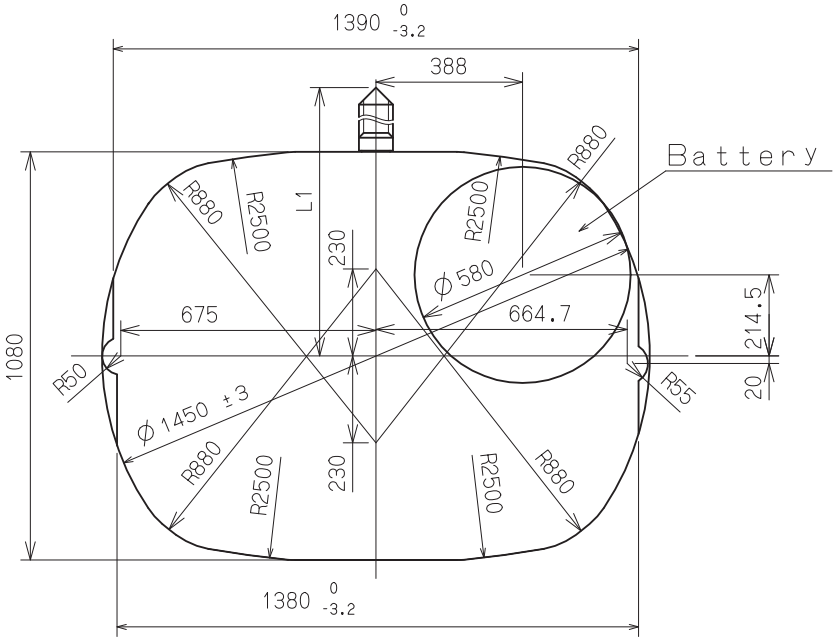

Unit : 1=1/100mm

Version : 1

Hand Fitting

VC00G

Hour hand unbalance ≦ 0.6μN·m(60mg·mm)
Minute hand unbalance ≦ 0.4μN·m(40mg·mm)

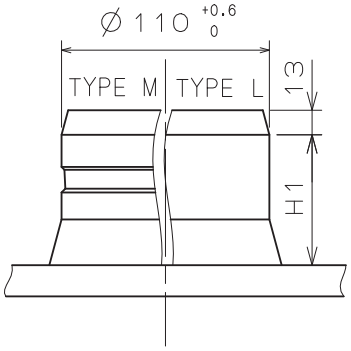

Hour wheel

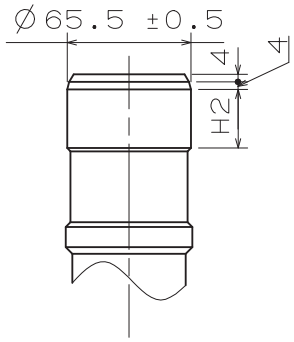

Center wheel

	Part No.		Dimension	
	Hour wheel 時針輪	Center wheel 分針輪	H1	H2
TYPE M 一般針高	0271 298	0270 082	69	31
TYPE L 高針	0271 304	0270 083	99	56

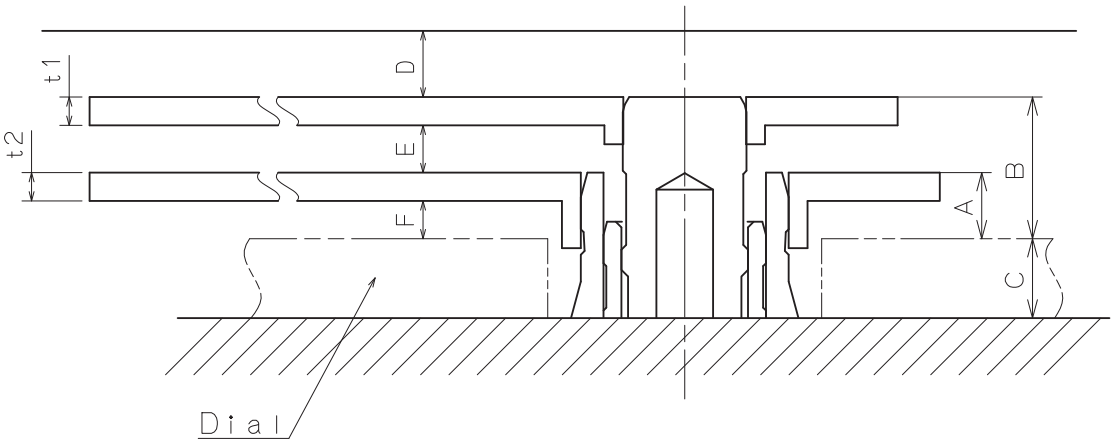

	A	B	C	D	E	F	t1	t2
TYPE M 一般針高	37	77	40	35	25	22	15	15
TYPE L 高針	35	78	72	35	28	20	15	15

Unit : 1=1/100mm

Version : 1

Hand Setting Stem

VC00G

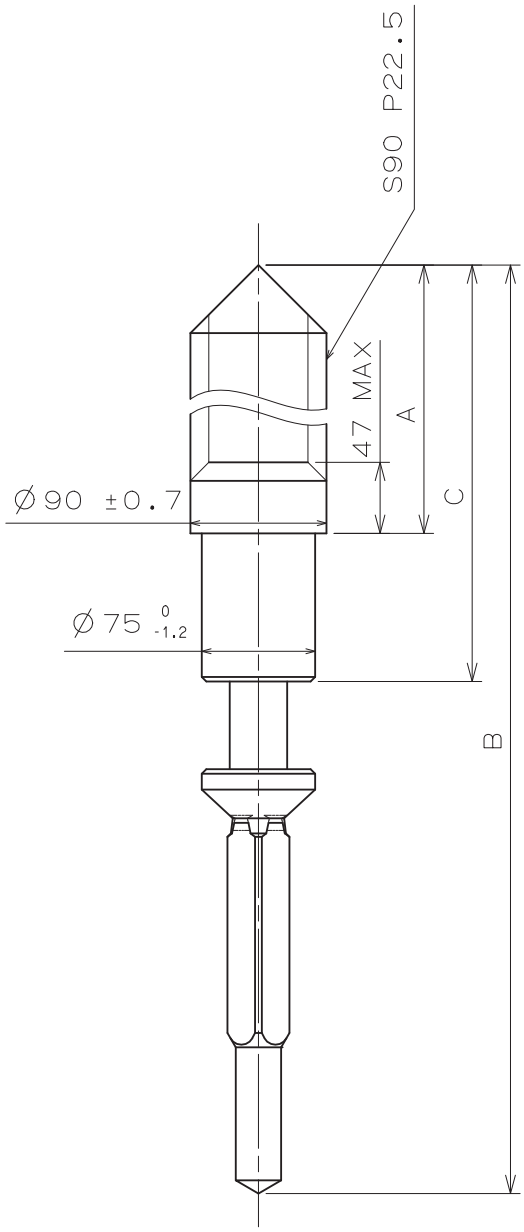

	Part No.	A	B	C
TYPE A	0351 173	1105	1542	1203
TYPE B	0351 120	1597	2034	1695

Unit : 1=1/100mm

Version : 1

Dial

VC00G

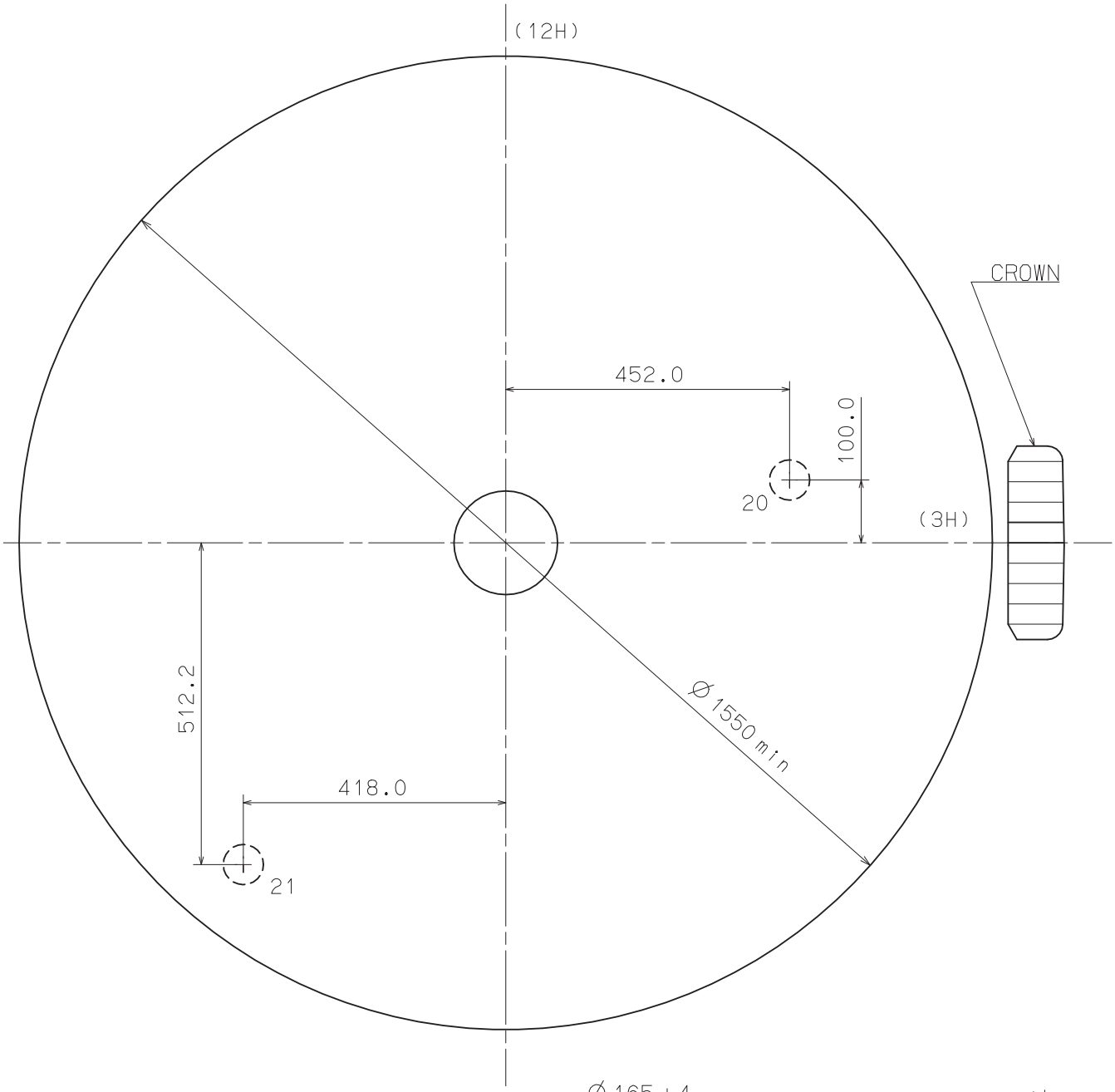

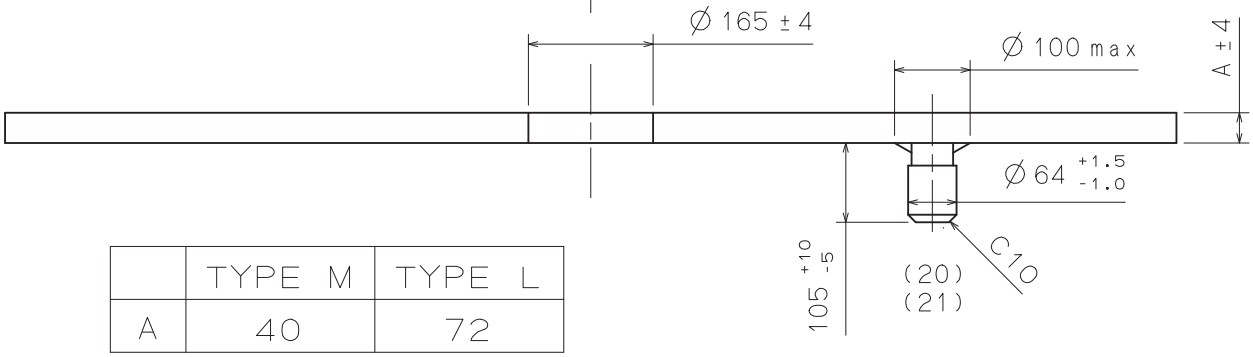

	TYPE M	TYPE L
A	40	72

Unit : 1=1/100mm

Version : 1

Casing Ring - 1

VC00G

	X	Y
C	0.00	0.00
1A	202.41	174.30
1B	313.37	408.84
1C	212.28	383.98
1D	-235.18	428.13
1E	-442.14	438.08
1F	-455.42	-195.67
1G	-182.96	-339.98
1H	0.00	-675.00
1J	330.00	-395.38
1K	515.00	-168.75
1L	97.37	668.25
1M	50.61	728.25
1N	-20.00	664.70
1P	-90.61	728.25
1R	-427.69	559.04
1S	-467.69	534.76

	X	Y
1T	-643.25	-126.97
1U	-638.58	-276.00
1V	-78.93	-718.25
1W	72.56	-728.25
1X	443.60	-699.44
1Y	603.57	-496.83
1Z	643.12	-256.64
2A	643.25	-101.10
2B	643.25	83.97
2C	-620.34	412.66
2D	-543.25	223.53
2E	-298.13	-436.08
2F	422.50	-601.69
2G	503.61	-499.80

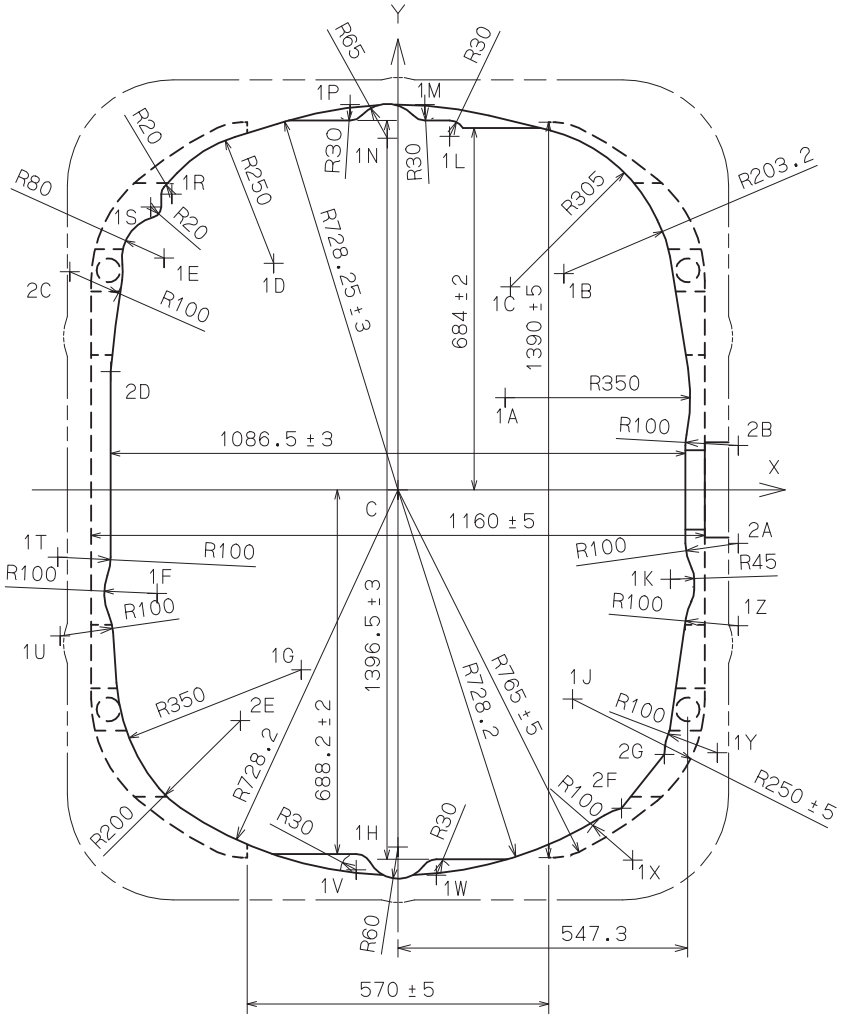

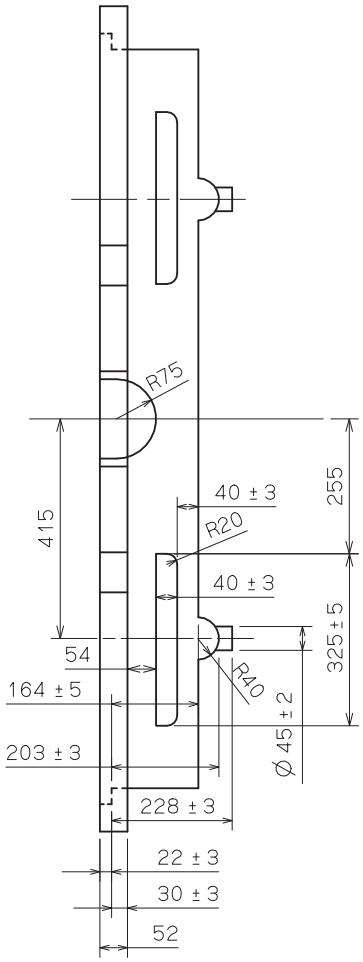

Unit : 1=1/100mm

Version : 1

Casing Ring - 2

VC00G

	X	Y
C	0.00	0.00
1A	202.41	174.30
1B	313.37	408.84
1C	212.28	383.98
1D	-235.18	428.13
1E	-442.14	438.08
1F	-455.42	-195.67
1G	-182.96	-339.98
1H	0.00	-675.00
1K	515.00	-168.75
1L	97.37	668.25
1M	50.61	728.25
1N	-20.00	664.70
1P	-90.61	728.25
1R	-427.69	559.04
1S	-467.69	534.76

	X	Y
1T	-643.25	-126.97
1U	-638.58	-276.00
1V	-78.93	-718.25
1W	72.56	-728.25
1X	443.60	-699.44
1Y	603.57	-496.83
1Z	643.12	-256.64
2A	643.25	-101.10
2B	643.25	83.97
2C	-620.34	412.66
2D	-543.25	223.53
2E	-298.13	-436.08
2F	422.50	-601.69
2G	503.61	-499.80

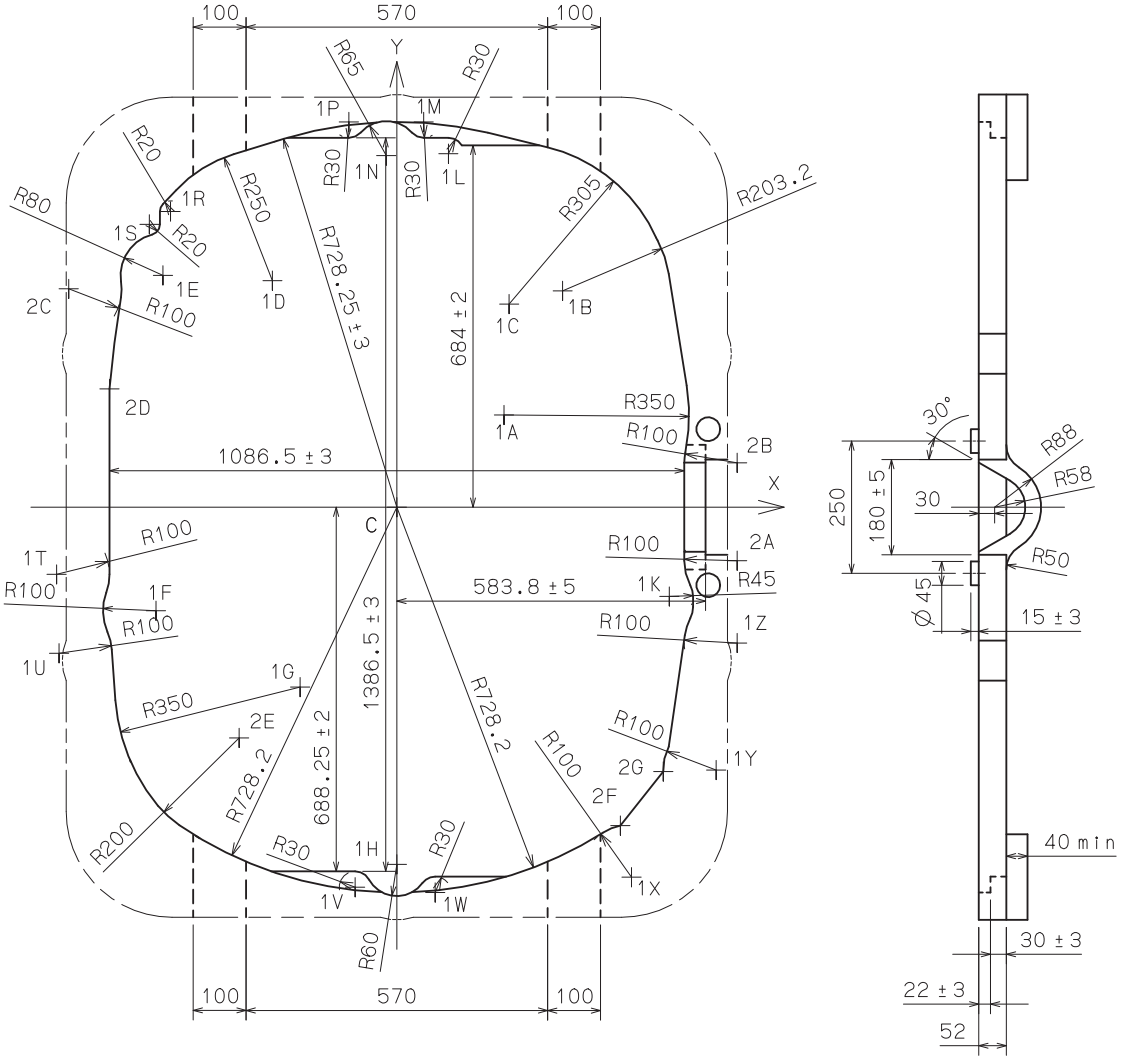

Unit : 1=1/100mm

Version : 1

Assembly Plan

VC00G

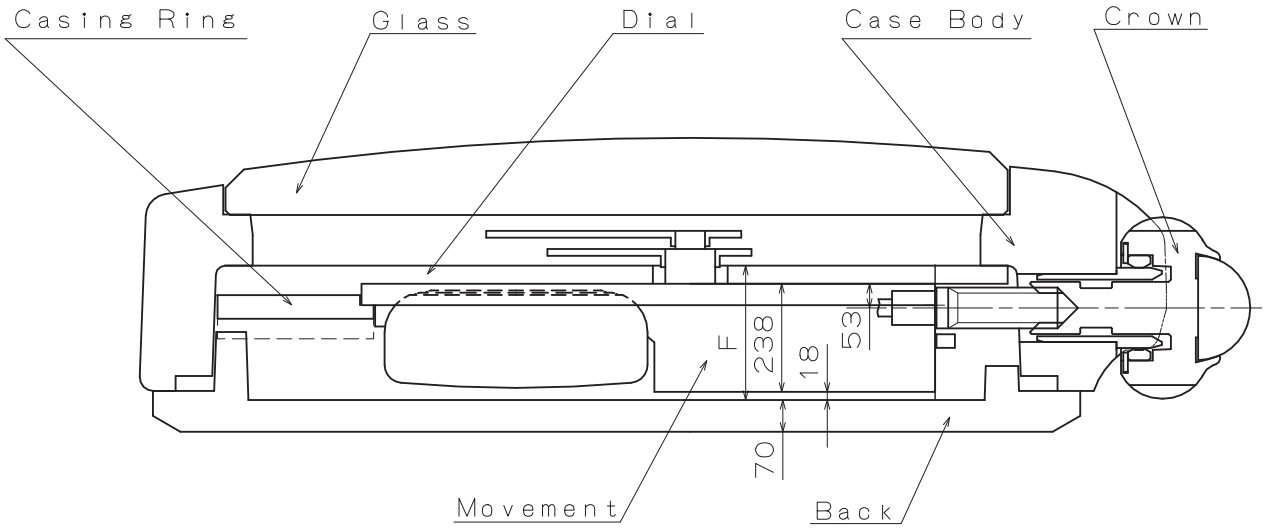

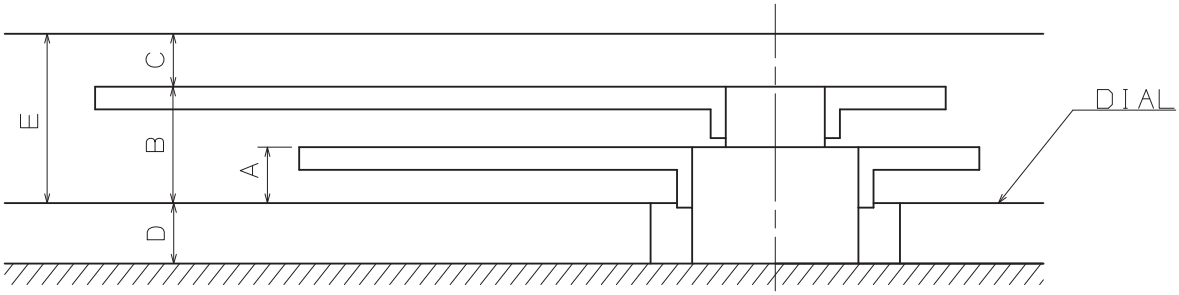

	A	B	C	D	E	F
TYPE M	37	77	35	40	112	296
TYPE L	35	78	35	72	113	328

Unit : 1=1/100mm

Version : 1

Hands

VC00G

MINUTE

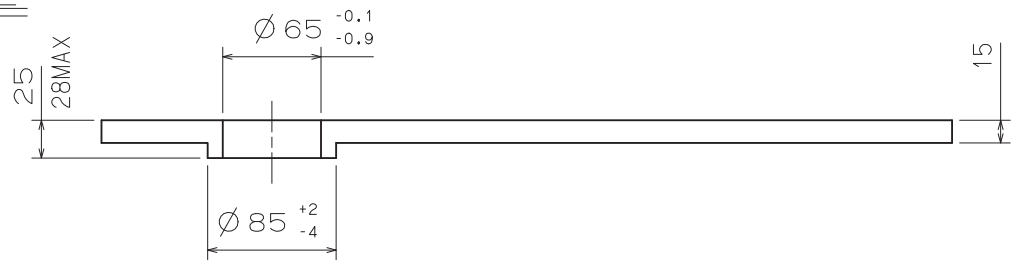

HOUR

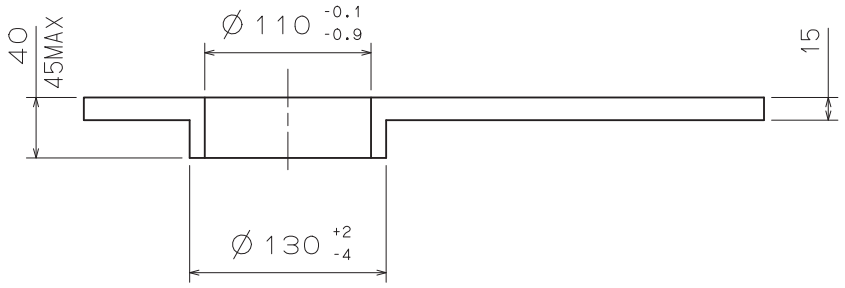

Unit : 1=1/100mm

Version : 1